POLARIS

**ENGINE, AIR INTAKE SYSTEM - Z26SPD92AN/AH/BN/BH (C750253)**

**2026 RZR - RZR PRO S ULTIMATE (R01) - Z26SPD92AN/AH/BN/BH**

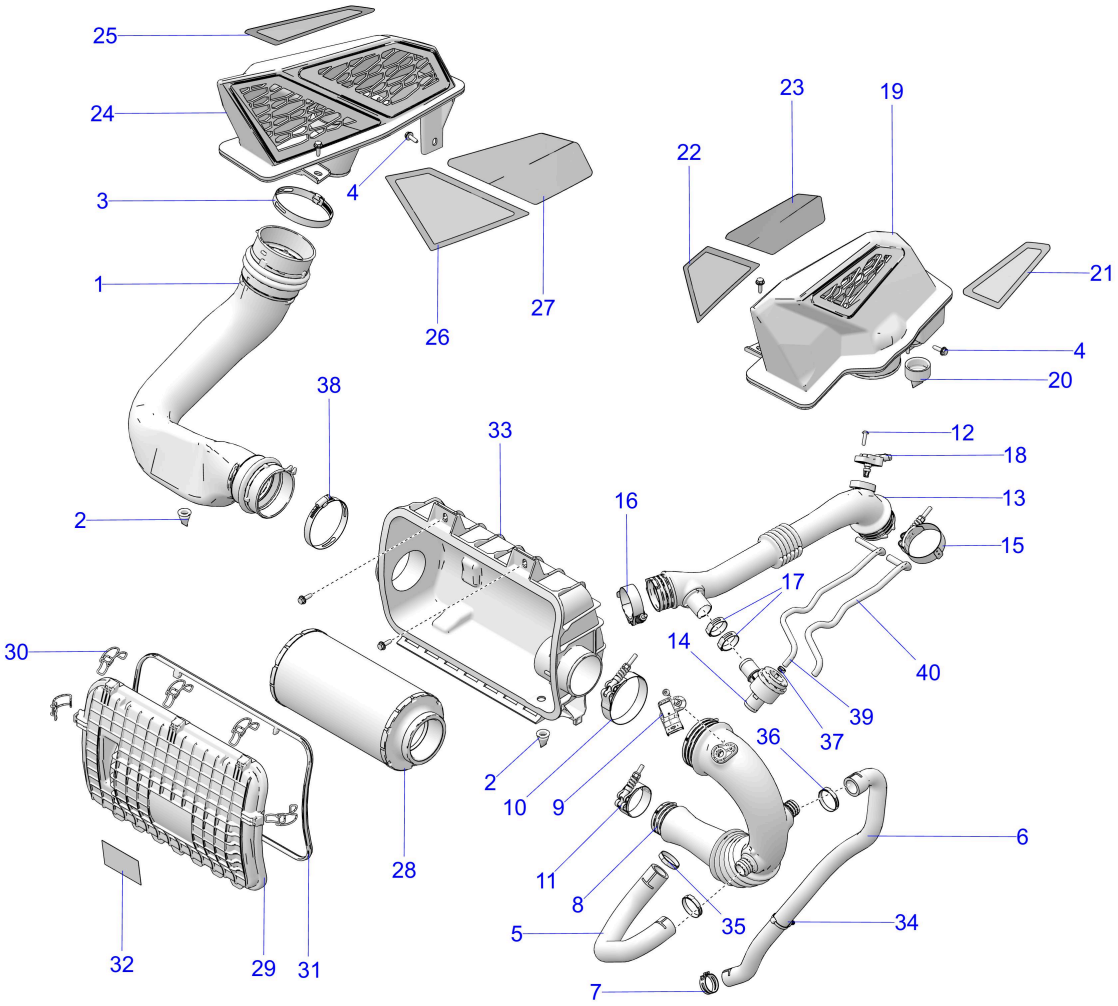


© 2023 Polaris Industries Inc. C750253

| *Reference #* | *Part#* | *Description* | *Quantity* |
|---|---|---|---|
| 1 | 1241537 | ASM-DUCT,AIRBOX,IN [INCL. QTY 1 OF 2] | 1 |
| 2 | 5414472 | PLUG-DRAIN | 2 |
| 3 | 7081969 | CLAMP-HOSE SLOTTED,92-100 DIA | 1 |
| 4 | 7518529 | SCR-M6X1.0X20,HXHD,FLG,TDFM,BK | 6 |
| 5 | 5415474 | HOSE-VENT,BOV | 1 |
| 6 | 5416756 | HOSE-VENT,ENG | 1 |
| 7 | 7080842 | SPRINGBAND-CLAMP 29/12,BLK | 1 |
| 8 | 1241308 | ASM-DUCT,INTAKE AIR [INCL. 9-12] | 1 |
| 9 | 2411528 | SENSOR-TMAP DSS3-TF | 1 |
| 10 | 7082093 | CLAMP-HOSE T-BOLT,87.3 DIA | 1 |
| 11 | 7082485 | CLAMP-HOSE T-BOLT,56 DIA | 1 |
| 12 | 7519952 | SCREW-PLASTITE,5.0MMX20-PN-T25 | 2 |
| 13 | 1244623 | ASM-DUCT,CHARGE AIR [INCL. QTY 1 OR 12 & 14-18] | 1 |
| 14 | 3024035 | VALVE-DUMP,TURBO | 1 |
| 15 | 7082091 | CLAMP-HOSE T-BOLT,66.3 DIA | 1 |
| 16 | 7082896 | CLAMP-HOSE T-BOLT,56 DIA | 1 |
| 17 | 7082095 | CLAMP-OETIKER,16704932-32 | 2 |
| 18 | 2413095 | SENSOR-TMAP,3BAR | 1 |

| | | | |
|---|---|---|---|
| 19 | 2637232 | ASM-BEZEL,INTAKE,LH [INCL. 20-23] | 1 |
| 20 | 5417149 | BOOT-PURGE VALVE,AIR BOX | 1 |
| 21 | 5456087 | SCREEN-INTAKE,OUTER,LH | 1 |
| 22 | 5456089 | SCREEN-INTAKE,INNER,FRONT,LH | 1 |
| 23 | 5456091 | SCREEN-INTAKE,INNER,REAR,LH | 1 |
| 24 | 2637233 | ASM-BEZEL,INTAKE,RH [INCL. 25-27] | 1 |
| 25 | 5456088 | SCREEN-INTAKE,OUTER,RH | 1 |
| 26 | 5456090 | SCREEN-INTAKE,INNER,FRONT,RH | 1 |
| 27 | 5456092 | SCREEN-INTAKE,INNER,REAR,RH | 1 |
| 28 | 1241084 | ASM-FILTER | 1 |
| 28 | 2882234 | K-FILTER,AIR,ULTRA,PERF,RZN HD Air Filter Kit | 1 |
| 29 | 1241468 | ASM-AIRBOX COVER [INCL. 30-32] | 1 |
| 30 | 7082596 | ASM-AIRBOX CLIP | 5 |
| 31 | 5814549 | SEAL-AIRBOX | 1 |
| 32 | 7182652 | DECAL-CAUT.AIR BOX | 1 |
| 33 | 5457123 | AIRBOX | 1 |
| 34 | 7081496 | CLIP FIR-TREE,DIA6-33MM | 1 |
| 35 | 7082107 | CLAMP-OETIKER, 16704965-36.1 | 1 |
| 36 | 7082108 | CLAMP-OETIKER,16702031-38.5 | 2 |
| 37 | 7082109 | CLAMP-OETIKER,16700005-10.0 | 1 |
| 38 | 7082805 | CLAMP-HOSE SLOTTED,84-96 DIA | 1 |
| 39 | 1241347 | ASM-HOSE REFERENCE,48CM | 1 |
| 39 | 8450153-48 | LINE-BOOST,3/16 ID,25CM | 1 |
| 40 | 5522158-45 | WRAP-FLEXFIT 2115,8MM,45CM | 1 |

Copyright 1996-2026 Polaris Industries U.S.A All rights reserved.